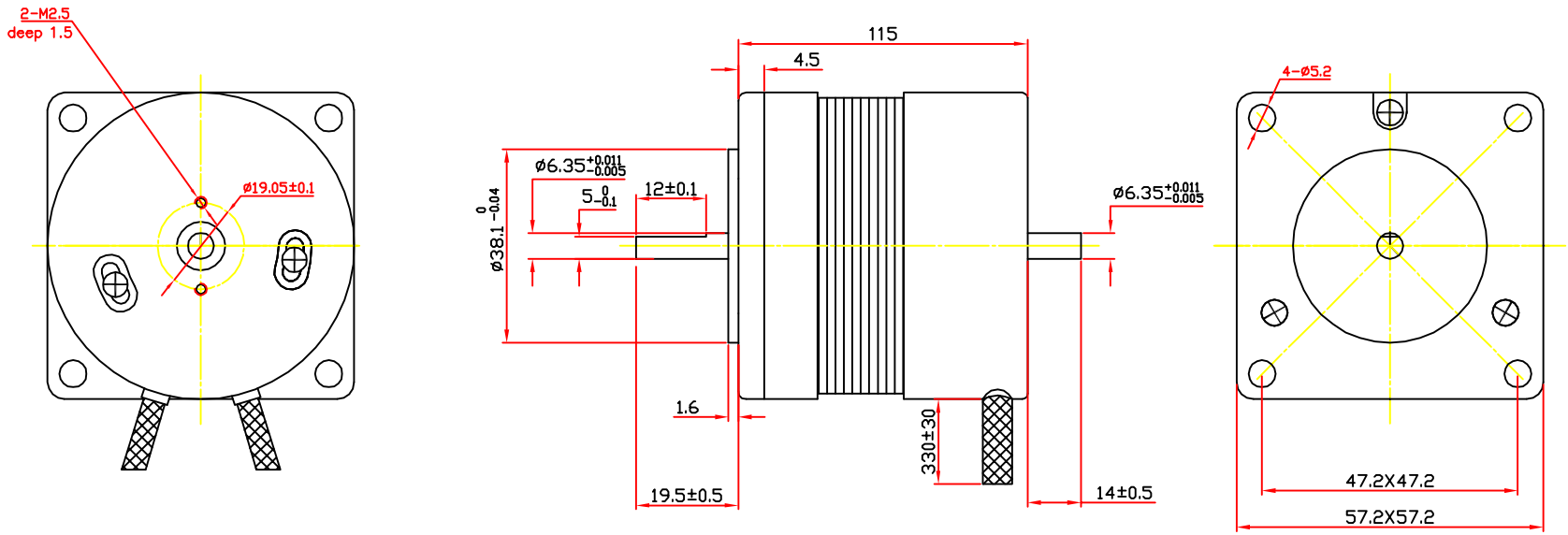

MODEL	KL23BLS-115
Number of poles	4 poles
LINE TO LINE RESISTANCE	0.38ohms±7%
LINE TO LINE INDUCTANCE	1mH±20%
NOMINAL VOLTAGE	36V
NO LOAD SPEED	5400±250RPM
NO LOAD CURRENT	0.4A
RATED TORQUE	0.4N.m
RATED SPEED	4000±300RPM
BACK EMF	5.1Vrms/KRPM
TORQUE CONSTANT	0.063Nm/A
WEIGHT	1.25Kg

WIRE DIAGRAM

UL1430 AWG20#			UL1430 AWG26#				
PHASE U	PHASE V	PHASE W	HALL +5V	HALL 1	HALL 2	HALL 3	HALL GND
YEL	RED	BLK	RED	BLU	GRN	WHT	BLK

REV	ECN NO	DESCRIPTION	DRN	APP'D	DATE

UNLESS OTHERWISE SPECIFIED
TOLERANCES:
DECIMALS: .x ±0.5 .xx ±0.25 .xxx ±0.1
ANGULAR: ±0°30'
UNIT: mm
DO NOT SCALE DRAWING

MATERIAL

THIRD ANGLE PROJECTION

DESIGN | DATE
CHECK
APPD
SCALE
SHEET OF

P/N.
TITLE SPECIFICATIONS
USED ON KL23BLS-115
REV

KELING